Reliability Modelling Incorporating Load Share and Frailty

Vincent Raja Anthonisamy
Department of Mathematics, Physics and Statistics
Faculty of Natural Sciences, University of Guyana
Georgetown, Guyana, South America.

UNIVERSITY of GUYANA

jointly with

G. Asha
Department of Statistics
CUSAT, Cochin, Kerala, India.

Nalini Ravishanker
Department of Statistics
University of Connecticut, USA.

Organization of the talk

1. Introduction to Load Sharing Models and its Generalizations.
2. Frailty Models
3. Generalized Bivariate Load Sharing Model with Frailty and Covariates.
4. Properties.
5. Model with Positive Stable Frailty and Weibull Baseline Hazard
6. Parameter Estimation.
7. Data Analysis.
8. Conclusion.

Load Sharing System

In a load sharing system, the probability of failure of any component will depend on the working status of the other component. See Daniels (1945, Proc. Royal Society of London A) and Rosen (1964). AIAA journal.

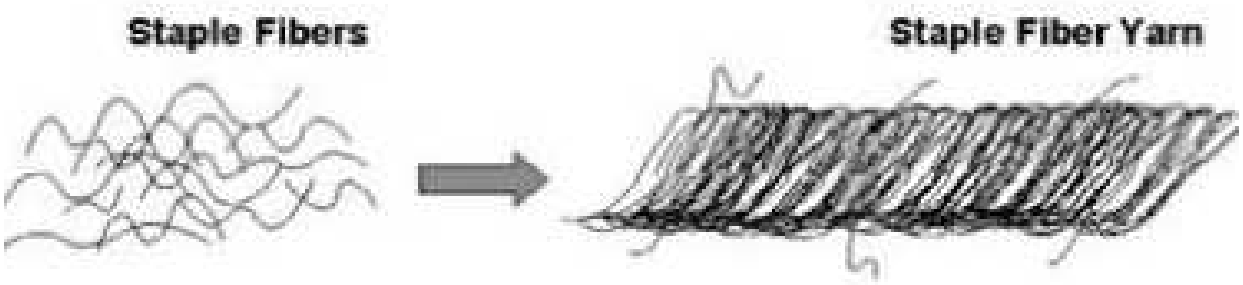

Load Sharing System

- A Load share rule dictates how the load is distributed to the surviving components.
- Not all load sharing rules are monotone (Kim and Kvam (2004), Drummond et. al (2000)).

Load Sharing Systems - Applications

- Paired Organs in biological sciences (Gross et al. (1971), Lemke et al. (2004)).
- Power transmission (Gosselin et al. (1995)).
- Computer Networking and Software Reliability (Epema et al.(1996)).
- Failures and Acquisitions of financial institutions and banks (Wheelock et al. (2000)).
- Collapsing of bridges (Komatsu and Sakimoto (1977)).

An excellent review on Load sharing systems is provided by Dewan and Nimbalkar (2010).

Two component load sharing system

- Two component parallel system.
- Freund's (1961) bivariate exponential distribution is an effective model for load sharing systems.

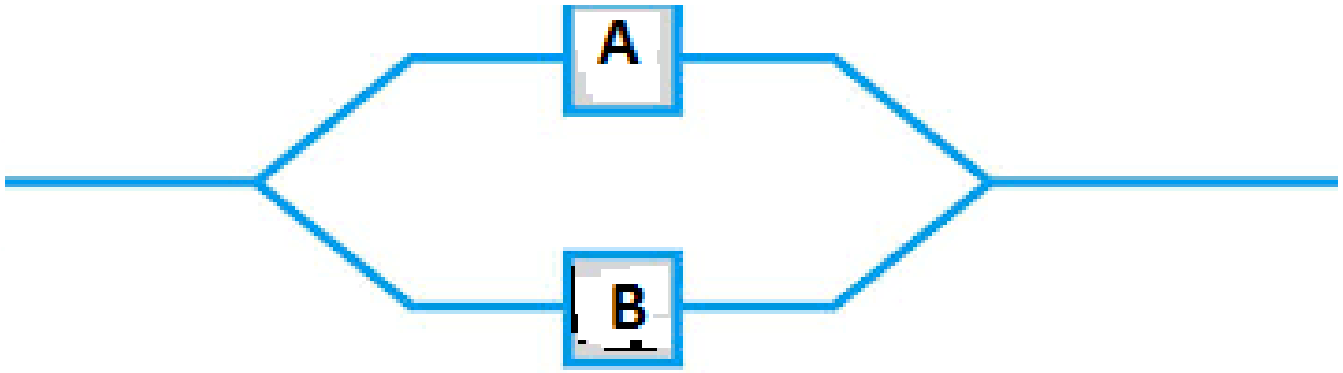

Two component load sharing system

In a two component load sharing system,

- Let T_1 and T_2 be non-negative random variables representing the lifetimes of A and B.
- the lifetime random variable of the surviving component changes to T_i^* if $T_j < T_i$, $i = 1, 2,\ i \neq j$.
- Hence we observe (T_1^*, T_2) if component B fails first or (T_1, T_2^*) if component A fails first.

To set notation, if we denote the lifetimes of the components A and B as non-negative random variable (Y_1, Y_2), then one observes

$$Y_1 = T_1^*,\ Y_2 = T_2,\ \text{if}\ Y_1 > Y_2,$$

$$Y_1 = T_1,\ Y_2 = T_2^*,\ \text{if}\ Y_1 < Y_2.$$

- If T_1 and T_2 are independent, $exp(\theta_i),\ i = 1, 2$ respectively.
- T_1^* and T_2^* are $exp(\theta_i'),\ i = 1, 2$ respectively.
- Then the joint probability density function of (Y_1, Y_2) is (Freund (1961)).

$$f(y_1, y_2) = \begin{cases} \theta_1' \theta_2 e^{-\theta_1' y_1} e^{-(\theta_1+\theta_2-\theta_1')y_2}, & y_1 > y_2 \\ \theta_1 \theta_2' e^{-(\theta_1+\theta_2-\theta_2')y_1} e^{-\theta_2' y_2}, & y_2 > y_1 \end{cases} \quad (1)$$

Extensions of Freund's Model

An extension to a model with Weibull component lifetime distributions is discussed in Lu, J.-C. ((1989), Reliability, IEEE Transactions on), Spurrier, J. D. and Weier, D. ((1981), Reliability, IEEE Transactions on), Shaked, M. ((1984), Operations research).

- T_1 and T_2 are independently distributed with respective survival functions $[S(.)]^{\theta_1}$, $\theta_1 > 0$ and $[S(.)]^{\theta_2}$, $\theta_2 > 0$.
- Again, T_1^* and T_2^* are assumed to have survival functions $[S(.)]^{\theta_1'}$, $\theta_1' > 0$ and $[S(.)]^{\theta_2'}$, $\theta_2' > 0$, respectively.
- The joint probability density function of the failure times (Y_1, Y_2) under the generalized model is (Asha et. al (2016))

$$f(y_1, y_2) = \begin{cases} \theta_1' \theta_2 f(y_1) f(y_2) [S(y_2)]^{(\theta_1+\theta_2-\theta_1'-1)} \\ [S(y_1)]^{\theta_1'-1}; & y_1 > y_2 \\ \theta_1 \theta_2' f(y_1) f(y_2) [S(y_1)]^{(\theta_1+\theta_2-\theta_2'-1)} \\ [S(y_2)]^{\theta_2'-1}; & y_2 > y_1. \end{cases} \tag{2}$$

Frailty

- An alternate modelling tool for correlated data is the frailty approach.
- Frailty accounts for neglected covariates.
- Clayton (1978) first used unobserved random covariates in multivariate survival models on chronic disease incidence in families.
- The term frailty was introduced by Vaupel et.al (1979) in univariate survival models.

- It is an unobserved random proportionality factor that modifies the hazard function of an individual/component.
- A frailty model is an extension of the Cox proportional hazard model. In addition to the observed regressors, a frailty model also accounts for the presence of a latent multiplicative effect on the hazard function.

- Cox PH Model: The failure rate $\lambda(y) = r(y)e^{\boldsymbol{X}\beta}$, where $r(y)$ is the baseline failure rate and $\boldsymbol{X}$ are observed covariates.
- Unobserved covariates $\underline{Z}$: then

$$\lambda(y|z) = z\, r(y)e^{\boldsymbol{X}\beta}$$

- Conditional survival function

$$S(y|z) = exp\left(-z\left[\Lambda(y)\right]e^{\boldsymbol{X}\beta}\right)$$

where $\Lambda(y) = \int_0^y r(t)dt$.

- Unconditional survival function

$$\begin{aligned} S(y) &= E_z\left[e^{-z\Lambda(y)e^{\boldsymbol{X}\boldsymbol{\beta}}}\right] \\ &= L_z\left[\Lambda(y)e^{\boldsymbol{X}\boldsymbol{\beta}}\right], \end{aligned}$$

where $L_z(s)$ is the Laplace transform of Z.

- For a two component system

$$S(y_1, y_2) = L_z\left[[\Lambda(y_1) + \Lambda(y_2)]e^{\boldsymbol{X}\boldsymbol{\beta}}\right]$$

where Y_1 and Y_2 are independent given Z.

- When frailty variable is integrated out Y_1 and Y_2 will become dependent because of the common frailty and is called shared frailty model.
- This frailty could be due to some genetic factors or environmental factors shared by paired organs in humans or components in system.
- When Y_1 and Y_2 are not independent then

$$S(y_1, y_2) = L_z \left[\Lambda(y_1, y_2) e^{\boldsymbol{X}\beta} \right].$$

A bivariate analogue of the univariate failure rate function is proposed by Cox (1972) as

$$\begin{aligned}\lambda_{i0}(y) &= \lim_{\Delta y \to 0+} \frac{P\left(y \leq Y_i < y + \Delta y | y \leq Y_1, y \leq Y_2\right)}{\Delta y}, \; y_i = y \\ \lambda_{ij}(y_i|y_j) &= \lim_{\Delta y_i \to 0+} \frac{P\left(y_i \leq Y_i < y_i + \Delta y_i | y_i \leq Y_i, Y_j = y_j\right)}{\Delta y_i}, \; y_j < y_i.\end{aligned} \tag{3}$$

Observe that $\lambda_{ij}(y_i|y_j), \; i, j = 1, 2$ is based on ageing as well as the load sharing features of the surviving components (Singpurwalla (2006)).

Given $\boldsymbol{X}$, and $Z = z$,

$$\begin{aligned}
\lambda_{10}(y|z, \boldsymbol{X}) &= z\theta_1 r(y) e^{\boldsymbol{X}\boldsymbol{\beta}}, \\
\lambda_{20}(y|z, \boldsymbol{X}) &= z\theta_2 r(y) e^{\boldsymbol{X}\boldsymbol{\beta}}, \ y_1 = y_2 = y > 0 \\
\lambda_{12}(y_1|y_2, z, \boldsymbol{X}) &= z\theta_1' r(y_1) e^{\boldsymbol{X}\boldsymbol{\beta}}, y_1 > y_2 \\
\lambda_{21}(y_2|y_1, z, \boldsymbol{X}) &= z\theta_2' r(y_2) e^{\boldsymbol{X}\boldsymbol{\beta}}, y_1 < y_2
\end{aligned} \tag{4}$$

Conditional Model Given Frailty and Covariates

$$f((y_1, y_2)|z, \boldsymbol{X}) = z^2 e^{2\boldsymbol{X}\boldsymbol{\beta}} \theta_i' \theta_j f(y_1) f(y_2) [S(y_j)]^{z e^{\boldsymbol{X}\boldsymbol{\beta}} (\theta_1 + \theta_2 - \theta_i') - 1} \times [S(y_i)]^{z e^{\boldsymbol{X}\boldsymbol{\beta}} \theta_i' - 1}; \; y_i > y_j \tag{5}$$

for $i \neq j = 1, 2$.

The corresponding joint survival function conditional on $\boldsymbol{X}$ and Z is given by

$$S(y_1, y_2|z, \boldsymbol{X}) = [1 - k_{ij}][S(y_i)]^{z(\theta_1+\theta_2)e^{\boldsymbol{X}\boldsymbol{\beta}}} + k_{ij}\left[\frac{S(y_i)}{S(y_j)}\right]^{z\theta_i' e^{\boldsymbol{X}\boldsymbol{\beta}}} [S(y_j)]^{z(\theta_1+\theta_2)e^{\boldsymbol{X}\boldsymbol{\beta}}}; \; y_i \geq y_j \quad (6)$$

where, $k_{ij} = \frac{\theta_j}{\theta_1+\theta_2-\theta_i'}$, when $\theta_1 + \theta_2 \neq \theta_i'$, $i \neq j = 1, 2$ and by

$$S(y_1, y_2|z, \boldsymbol{X}) = [S(y_i)]^{z(\theta_1+\theta_2)e^{\boldsymbol{X}\boldsymbol{\beta}}} \left[1 + ze^{\boldsymbol{X}\boldsymbol{\beta}}\theta_j \left(\log\ S(y_j) - \log\ S(y_i)\right)\right] \quad (7)$$

when $\theta_1 + \theta_2 = \theta_i'$, for $i \neq j = 1, 2$.

Unconditional Model

In general the unconditional joint survival function is given by

$$S(y_1, y_2|\boldsymbol{X}) = [1 - k_{ij}]L_z(\Psi_1(y_i|\boldsymbol{X})) + k_{ij}L_z(\Psi_{ij}(y_1, y_2|\boldsymbol{X})); \;\; y_i \geq y_j, \tag{8}$$

where,
$\Psi_1(y_i|\boldsymbol{X}) = (\theta_1 + \theta_2)H(y_i)e^{\boldsymbol{X}\boldsymbol{\beta}}$,
$\Psi_{ij}(y_1, y_2|\boldsymbol{X}) = [\theta_i' H(y_i) + (\theta_1 + \theta_2 - \theta_i')H(y_j)]e^{\boldsymbol{X}\boldsymbol{\beta}}$ and
$\theta_1 + \theta_2 \neq \theta_i', \;\; i \neq j = 1, 2.$

For $\theta_1 + \theta_2 = \theta_i'$ we obtain the unconditional survival function for $y_i > y_j$ as

$$S(y_1, y_2|\boldsymbol{X}) = L_z(\Psi_1(y_i)) + \left[e^{\boldsymbol{X}\beta}\theta_2 \left(log\, S(y_j) - log\, S(y_i) \right) \frac{\partial}{\partial(\Psi_1(y_i))} L_z(\Psi_1(y_i)) \right] \tag{9}$$

The corresponding density in both the cases is

$$f(y_1, y_2|\boldsymbol{X}) = \theta_i'\theta_j r(y_1) r(y_2) e^{2\boldsymbol{X}\beta} \left[\frac{\partial^2 L_z(s)}{\partial s^2} \right]_{s=\Psi_{ij}(y_1,y_2)} ; y_i > y_j \;\; i,j = 1,2, \;\; i \neq j. \tag{10}$$

Cross Ratio Function

It is of interest to quantify the association between the failure times in bivariate survival data. Clayton's local cross-ratio function (*CRF*) describes the time varying dependence and is defined at (y_1, y_2) by (see Clayton(1978), Oakes(1989).

$$\mathcal{C}(y_1, y_2) = \frac{S(y_1, y_2|\boldsymbol{X})S_{12}(y_1, y_2|\boldsymbol{X})}{S_1(y_1, y_2|\boldsymbol{X})S_2(y_1, y_2|\boldsymbol{X})},$$

where $S_j(y_1, y_2|\boldsymbol{X}) = \frac{\partial S(y_1,y_2|\boldsymbol{X})}{\partial y_j}$, $j = 1, 2$ and $S_{12}(y_1, y_2|\boldsymbol{X}) = \frac{\partial^2 S(y_1,y_2|\boldsymbol{X})}{\partial y_1 \partial y_2}$. For the unconditional bivariate survival functions in (8) and (9), the *CRF's* are respectively defined as $\mathcal{C}_1(y_1, y_2)$ and $\mathcal{C}_2(y_1, y_2)$ are as follows:

$$\frac{\frac{\partial}{\partial y_i}\left[\log \frac{\partial}{\partial s} L_z(\Psi_{ij}(y_1, y_2)\right]}{\frac{\partial}{\partial y_i}\left[\log\left\{(1-k_{ij})L_z(\Psi_1(y_i)) + k_{ij}L_z(\Psi_{ij}(y_1, y_2))\right\}\right]}; \; y_i > y_j \quad (11)$$

and

$$\frac{\frac{\partial}{\partial s}\left[\log \frac{\partial L_z(s)}{\partial s}\right]_{s=\Psi_1(y_i)} \frac{\partial}{\partial y_i}\Psi_1(y_i)}{\frac{\partial}{\partial y_i}\log\left[L_z(\Psi_1(y_i)) + \left(e^{\boldsymbol{X}\boldsymbol{\beta}}\theta_2(\log S(y_j) - \log S(y_i))\frac{\partial}{\partial s}L_z(s)\right)_{s=\Psi_1(y_i)}\right]} \tag{12}$$

Example

Let the frailty random variable Z follow a one parameter Gamma distribution with density function $f(z) = \frac{\alpha^{\alpha} z^{\alpha-1} e^{-\alpha z}}{\Gamma(\alpha)}, z > 0, \alpha > 0$ and Laplace transform $L_z(s) = \left[1 + \frac{s}{\alpha}\right]^{-\alpha}, \alpha > 0$. Then, the load share Gamma frailty model is

$$f(y_1, y_2|\boldsymbol{X}) = \theta_i' \theta_j r(y_1) r(y_2) e^{\boldsymbol{X}\beta} \left(\frac{1+\alpha}{\alpha}\right) \times \left[1 + \frac{\Psi_{ij}(y_1, y_2)}{\alpha}\right]^{-(\alpha+2)} ; \; y_i > y_j, \; i \neq j = 1, 2. \tag{13}$$

Example

Let the frailty random variable Z belong to the power variance family (PVF) of distributions with density function

$$f(z) = e^{\sigma z + \frac{\sigma}{\alpha}} \frac{1}{z} \sum_{k=1}^{\infty} \left[\frac{\left(\frac{z^{\alpha}}{(\alpha \sigma^{\alpha-1})} \right)^{k}}{k! \Gamma(-k\alpha)} \right], z > 0$$ and Laplace transform

$L_z(s) = e^{-\frac{\sigma\{(1+\frac{s}{\sigma})^{\alpha}-1\}}{\alpha}}$. Then the load share PVF frailty model is

$$f(y_1, y_2|\boldsymbol{X}) = \theta_i' \theta_j r(y_1) r(y_2) e^{2\boldsymbol{X}\boldsymbol{\beta}} \left(1 + \Psi_{ij}(y_1, y_2)\right)^{(\alpha-2)} \times e^{-\frac{\sigma}{\alpha}\left[\left(1+\frac{\Psi_{ij}(y_1,y_2)}{\alpha}\right)^{\alpha}-1\right]} \left[\left(1 + \Psi_{ij}(y_1, y_2)\right)^{\alpha} + (\alpha - 1)\right]; \quad (14)$$

$\alpha > 0, \; y_i > y_j, \quad i \neq j = 1, 2.$

Example

Let the frailty random variable Z follow the inverse Gaussian distribution with density function $f(z) = \left[\frac{1}{2\pi\sigma^2}\right]^{\frac{1}{2}} z^{\frac{-3}{2}} e^{\frac{-(z-1)^2}{2z\sigma^2}}; z > 0, \sigma^2 > 0$ and Laplace transform $L_z(s) = \exp\left[\frac{1-(1+2\sigma^2 s)^{\frac{1}{2}}}{\sigma^2}\right]$. Then the load share inverse Gaussian frailty model is

$$f(y_1, y_2|\underline{X}) = \theta_i'\theta_j r(y_1) r(y_2) e^{2\boldsymbol{X}\boldsymbol{\beta}} \times \left.\frac{\partial^2 \left[\exp\left(\frac{1-(1+2\sigma^2 s)^{\frac{1}{2}}}{\sigma^2}\right)\right]}{\partial s}\right|_{s=\Psi_{ij}(y_1,y_2)}; \qquad (15)$$

$y_i > y_j,\ i \neq j = 1, 2.$

Model with Positive Stable Frailty and Weibull Baseline Hazard

In this section we consider a particular example of the model in (10), with the widely used Weibull cumulative baseline hazard, $H(y) = y^{\gamma}$, and the positive α-stable frailty (Oakes (1989)) with probability density function and Laplace transform given by (Hougaard (2000))

$$f(z) = \frac{1}{\pi} \sum_{l=1}^{\infty} \frac{\Gamma(l\alpha + 1)}{l!} \left(-\frac{1}{z}\right)^{l\alpha+1} \sin(l\alpha\pi); \; z > 0, \; 0 < \alpha < 1, \tag{16}$$

and

$$L_z(s) = E\{e^{-sZ}\} = e^{-s^{\alpha}}. \tag{17}$$

For $y_i \geq y_j$ and $\theta_1 + \theta_2 \neq \theta_i'$ the model (8) reduces to

$$S(y_1, y_2|\boldsymbol{X}) = (1 - k_{ij})e^{-[\varphi_1(y_i|\boldsymbol{X})]^\alpha} + k_{ij}e^{-[\varphi_{ij}(y_1,y_2|\boldsymbol{X})]^\alpha}. \quad (18)$$

For $\theta_1 + \theta_2 = \theta_i'$, the model (9) reduces to

$$S(y_1, y_2|\boldsymbol{X}) = e^{-[\varphi_1(y_i|\boldsymbol{X})]^\alpha} + e^{-[\boldsymbol{X}\boldsymbol{\beta}]}\theta_2(y_i^\gamma - y_j^\gamma)\frac{\partial}{\partial\varphi_1(y_i|\boldsymbol{X})}e^{[\varphi_1(y_i|\boldsymbol{X})]^\alpha}, \quad (19)$$

the corresponding bivariate density function for $y_i > y_j$ simplifies to

$$\begin{aligned} f(y_1, y_2|\boldsymbol{X}) &= \theta_i \theta_j' \alpha \gamma^2 (y_1 y_2)^{\gamma-1} e^{2\boldsymbol{X\beta} - [\varphi_{ij}(y_1, y_2|\boldsymbol{X})]^\alpha} \\ &\times [\varphi_{ij}(y_1, y_2|\boldsymbol{X})]^{\alpha-2}(1 + \alpha([\varphi_{ij}(y_1, y_2|\boldsymbol{X})]^\alpha - 1)), \end{aligned} \tag{20}$$

where, $\varphi_{ij}(y_1, y_2|\boldsymbol{X}) = e^{\boldsymbol{X\beta}} \left(\theta_i' y_i^\gamma + (\theta_1 + \theta_2 - \theta_i') y_j^\gamma\right)$,
$\varphi_1(y_i|\boldsymbol{X}) = e^{\boldsymbol{X\beta}}(\theta_1 + \theta_2) y_i^\gamma, \;\; i \neq j = 1, 2.$

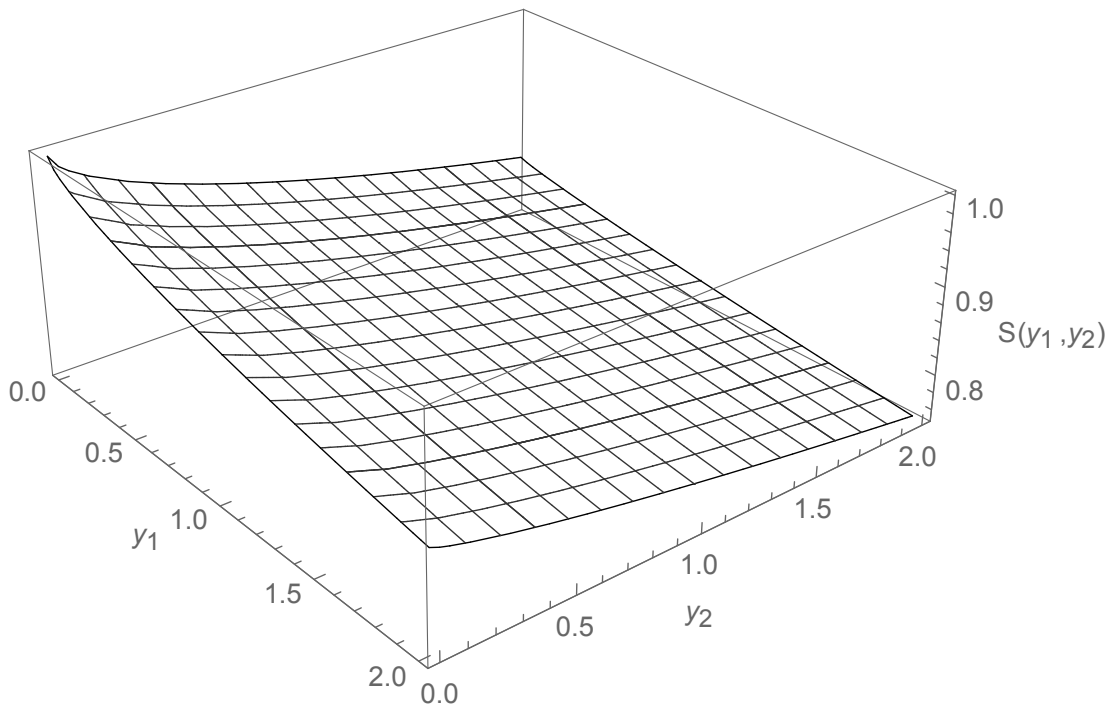

Figure: Survival function in (15)
$\alpha = 0.8,\ \theta_1 = 0.05,\ \theta_2 = 0.07,\ \theta_1' = 0.09,\ \theta_2' = 0.11,\ \gamma = 0.8$ and $\beta = 0$.

Parameter Estimation

We propose a profile likelihood estimation method. In the first stage, we set $\theta_i = n[\sum_{r=1}^{n} y_{ir}]^{-1}$, $i = 1, 2$, as initial values and obtain the MLEs of θ_1', θ_2', β, α, γ. In the second stage, we estimate θ_1 and θ_2 by maximum likelihood method by substituting MLEs of θ_1', θ_2', β, α, γ obtained in the first stage. This process is continued iteratively till all the estimates convergence. The computation is carried out using "FindMaximum" built in function of Mathematica 10.

Simulation Study

- Generate a random sample of size n from positive stable distribution having density as given in (16), by using the model

$$z_r = E_r^{\left(\frac{-(1-\alpha)}{\alpha}\right)} (\sin(\xi_r))^{\frac{-1}{\alpha}} \times \sin(\alpha\xi_r) \times \sin[(1-\alpha)\xi_r]^{\frac{1-\alpha}{\alpha}} \quad (21)$$

  (McKenzie (1982)).
- The covariate X_1 is generated from $N(0, \sigma)$, here we take $\sigma = 0.77$.

- Now, the bivariate sample (y_{1r}, y_{2r}), $r = 1, 2, ..., n$ is given as
- If $u_{1r} \leq \frac{\theta_1}{\theta_1+\theta_2}$, then $y_{1r} = \left[\frac{-1}{z_r\theta_1 e^{X_1\beta}} ln(1 - u_{2r})\right]^{\frac{1}{\alpha}}$ and $y_{2r} = \left[y_{1r} + \{-\frac{1}{z_r\theta_2' e^{X_1\beta}} ln(1 - u_{3r})\}^{\frac{1}{\alpha}}\right]$
- If $u_{1r} > \frac{\theta_1}{\theta_1+\theta_2}$, then $y_{2r} = \left[\frac{-1}{z_r\theta_2 e^{X_1\beta}} ln(1 - u_{2r})\right]^{\frac{1}{\alpha}}$ and $y_{1r} = \left[y_{2r} + \{-\frac{1}{z_r\theta_1' e^{X_1\beta}} ln(1 - u_{3r})\}^{\frac{1}{\alpha}}\right]$.

Parameters	True values	Absolute bias	RMSE
		n=25	
θ_1	0.3	0.0639	0.0593
θ_2	0.5	0.0593	0.0262
θ'_1	0.9	0.0414	0.1104
θ'_2	2.1	0.0817	0.1661
α	0.5	0.0708	0.0840
γ	0.7	0.0839	0.1162
β	0.5	0.0366	0.0643
		n=150	
θ_1	0.3	0.0468	0.0402
θ_2	0.5	0.0314	0.0105
θ'_1	0.9	0.0265	0.0821
θ'_2	2.1	0.0670	0.1507
α	0.5	0.0654	0.0661
γ	0.7	0.0632	0.0856
β	0.5	0.0311	0.0492

Data Set 1

The data set consists of a parallel system containing two motors. The system configuration was made in such a way that when both motors are functioning, the load is shared between them. If one of the motors fails, the entire load is then shifted to the surviving motor. The system fails when both motors fail. The data was originally published and analysed in Relia Soft, Reliability Edge Home (2003) www.reliasoft.com.

Y_1 - Time to failure for Motor A,

Y_2 - Time to failure for Motor B,

Z- Stress factor

(1). Model 1 (Load share, Frality).

(2). Model 2 (Load Share alone)

(3). Model 3 (Frailty alone)

$$
\begin{aligned}
\ell(\tilde{\tau}) = {} & n_1 \ log \ \theta_1 + n_2 \ log \ \theta_2' + n_2 \ log \ \theta_1' + n_2 \ log \ \theta_2 + n \ log \ \alpha \\
& + 2n \ log \ \gamma + (\gamma - 1) \sum_{r=1}^{n} (log \ y_{1r} + log \ y_{2r}) - \sum_{r=1}^{n_1} [\Phi_{12}(y_{1r}, y_{2r})]^{\alpha} \\
& + (\alpha - 2) \sum_{r=1}^{n_1} log \, [\Phi_{12}(y_{1r}, y_{2r})] + \sum_{r=1}^{n_1} log \, [1 + \alpha [\Phi_{12}(y_{1r}, y_{2r})]^{\alpha} - 1 \\
& - \sum_{r=1}^{n_2} [\Phi_{21}(y_{1r}, y_{2r})]^{\alpha} + \sum_{r=1}^{n_2} log \, [1 + \alpha([\Phi_{21}(y_{1r}, y_{2r})]^{\alpha} - 1)] \\
& + (\alpha - 2) \sum_{r=1}^{n_2} log \, [\Phi_{21}(y_{1r}, y_{2r})] \qquad (22)
\end{aligned}
$$

Model	Parameter Estimates						
	$\widehat{\theta}_1$	$\widehat{\theta}_2$	$\widehat{\theta}'_1$	$\widehat{\theta}'_2$	$\widehat{\gamma}$	$\widehat{\alpha}$	AIC
			Model 1				
Estimates	0.021	0.051	0.275	0.299	0.732	0.642	480.5
S.E	0.002	0.006	0.03	0.028	0.016	0.025	
LCL	0.017	0.038	0.216	0.245	0.683	0.610	
UCL	0.024	0.063	0.333	0.354	0.780	0.674	
			Model 2				
Estimates	0.021	0.016	0.218	0.198	0.822		494.9
S.E	0.002	0.001	0.003	0.003	0.011		
LCL	0.017	0.014	0.212	0.193	0.801		
UCL	0.024	0.019	0.224	0.204	0.843		
			Model 3				
Estimates					0.762	0.227	558
S.E					0.056	0.018	
LCL					0.653	0.113	
UCL					0.872	0.331	

Y_1	Y_2	CR for Model 1	CR for Model 2	Ratio
102	65	4.96	1.73	2.85
156	121	5.77	1.80	3.21
148	123	6.71	1.83	3.66
245	156	4.21	1.70	2.48
235	172	4.88	1.76	2.78
220	192	7.03	1.85	3.79
250	212	6.30	1.83	3.43
300	248	5.70	1.81	3.14
84	148	4.02	1.67	2.41
88	202	3.55	1.58	2.24
139	150	6.30	1.89	3.34
207	214	6.64	1.91	3.47
212	220	6.56	1.91	3.43
213	265	4.79	1.79	2.67
220	275	4.75	1.79	2.65
243	300	4.76	1.79	2.65
257	330	4.53	1.77	2.56
263	350	4.36	1.75	2.49

Cross Validation

The conditional survival function for load share frailty model in (6) is given as

$$S(y_i|y_j) = \frac{\theta_j \left[S(y_i)\right]^{z\theta_i' e^{\boldsymbol{X}\boldsymbol{\beta}}} \left[S(y_j)\right]^{ze^{\boldsymbol{X}\boldsymbol{\beta}}(\theta_1+\theta_2-\theta_i'-1)}}{(1-k_{ij})(\theta_1+\theta_2)\left[S(y_j)\right]^{ze^{\boldsymbol{X}\boldsymbol{\beta}}(\theta_1+\theta_2)-1} + k_{ij}\theta_j' \left[S(y_j)\right]^{z\theta_j' e^{\boldsymbol{X}\boldsymbol{\beta}}-1}}; \tag{23}$$

$i \neq j = 1, 2.$

Deleted sample point	Model 1	Model 2	Model 3
(101, 65)	0.1058	0.2034	0.3261
(156, 121)	0.1383	0.2857	0.3493
(148, 123)	0.1693	0.3220	0.3628
(245, 156)	0.0656	0.2026	0.3041
(235, 172)	0.0998	0.2581	0.3286
(220, 192)	0.1785	0.3504	0.3611
(250, 212)	0.1567	0.3332	0.3526
(300, 248)	0.1354	0.3188	0.3432
(84, 148)	0.1223	0.1620	0.5156
(88, 202)	0.0543	0.0910	0.5632
(139, 150)	0.4549	0.4702	0.4117
(207, 214)	0.5135	0.5162	0.3857
(212, 220)	0.5046	0.5119	0.3934
(213, 265)	0.2404	0.3446	0.3750
(220, 275)	0.2330	0.3411	0.3739
(243, 300)	0.2362	0.3504	0.3722
(257, 330)	0.1947	0.3215	0.3687
(263, 350)	0.1646	0.2974	0.3660

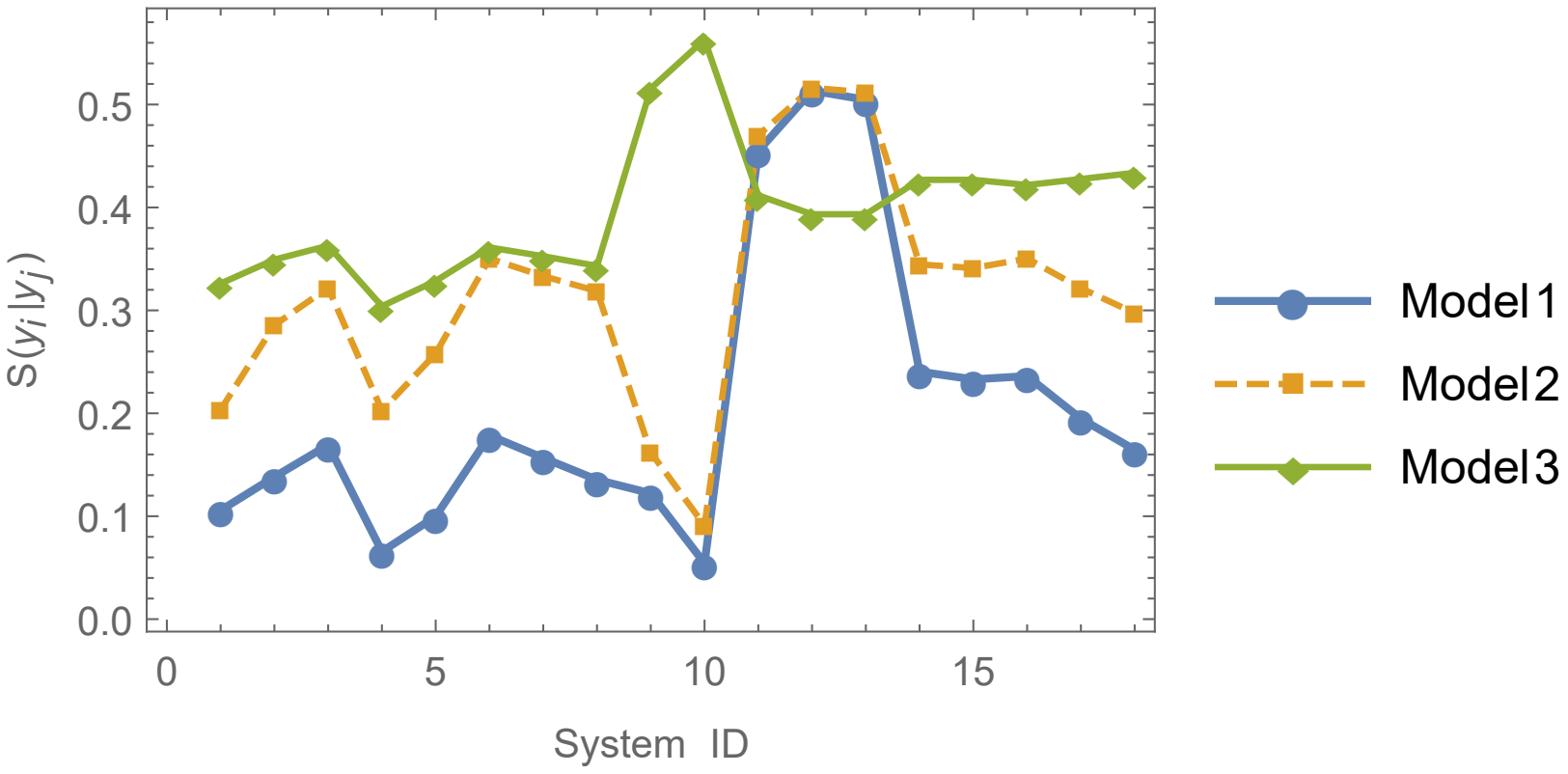

Figure: Comparison of conditional survival probabilities for the three models with motor data.

The AIC also supports the load share positive stable frailty model (Model 1). The K-S test revealed that both the marginals fit well under this model. From the cross validation we observe that in most of the cases (83.33%) the load share frailty model gives least conditional survival probability thereby predicting the failures of the second component more accurately than the other two models. Notice that for motors representing the systems 12, 13 and 14, both the models incorporating load share perform poorly compare to the positive stable frailty model. We suspect it is more likely that there is some external force had affected the three consecutive motors in the systems mentioned. It is desirable to further investigate the circumstances under which these motors were performed.

Censoring Case

The proposed model can also be extended when the observed data has some censoring cases. Suppose we have n pairs (systems or organs) under study, and the rth pair has component life times (y_{1r}, y_{2r}) and a censoring time (w_r), then the lifetime associated with the rth pair of components is given by

$$\begin{aligned}
(Y_{1r}, Y_{2r}) &= (y_{1r}, y_{2r}); \quad \max(y_{1r}, y_{2r}) < w_r \\
&= (y_{1r}, w_r); \quad y_{1r} < w_r < y_{2r} \\
&= (w_r, y_{2r}); \quad y_{2r} < w_r < y_{1r} \\
&= (w_r, w_r); \quad w_r < \min(y_{1r}, y_{2r})
\end{aligned}$$

We are interested in estimating $\tilde{\tau} = (\theta_1, \theta_2, \theta_1', \theta_2', \boldsymbol{\alpha}, \boldsymbol{\beta}, \boldsymbol{\gamma})$, with $\boldsymbol{\alpha}, \boldsymbol{\beta}, \boldsymbol{\gamma}$ denoting the frailty, regression, and baseline parameters respectively.

The likelihood function given the data is

$$\prod_{r=1}^{n_1} f_{1r} \prod_{r=1}^{n_2} f_{2r} \prod_{r=1}^{n_3} f_{3r} \prod_{r=1}^{n_4} f_{4r} \prod_{r=1}^{n_5} S(w_r, w_r|\boldsymbol{X})$$

where

$$f_{1r} = k_{12} \; \frac{\partial^2 L_z\left(\Psi_{12}(y_{1r}, y_{2r})\right)}{\partial y_{1r} \partial y_{2r}}; \;\; y_{2r} < y_{1r} < w_r,$$

$$f_{2r} = k_{21} \; \frac{\partial^2 L_z\left(\Psi_{21}(y_{1r}, y_{2r})\right)}{\partial y_{1r} \partial y_{2r}}; \;\; y_{1r} < y_{2r} < w_r,$$

$$f_{3r} = \int_{y_2} \theta_i' \theta_j r(w_r) r(y_2) e^{2\boldsymbol{X}\boldsymbol{\beta}} \left[\frac{\partial^2 L_z(s)}{\partial s^2}\right]_{s=\Psi_{ij}(w_r, y_2)} ; \;\; y_{2r} < w_r < y_{1r},$$

$$f_{4r} = \int_{y_1} \theta_i' \theta_j r(y_1) r(w_r) e^{2\boldsymbol{X}\boldsymbol{\beta}} \left[\frac{\partial^2 L_z(s)}{\partial s^2}\right]_{s=\Psi_{ij}(y_1, w_r)} ; \;\; y_{1r} < w_r < y_{2r},$$

Data Set 2: Diabetic Retinopathy Study Data

(i). Y_1: Onset of blindness for the treated eye.

(ii). Y_2: Onset of blindness for the untreated eye.

(iii). X_1: Age (Juvenile or Adult).

(iv). Z: Genetic Factor (Frailty).

(v). Originally Studied by Huster (1989).

(vi). Sahu and Dey (2000).

(vii). Hanagal (2011).

(viii). Model 1 (Load share, Frality and Covariate).

(ix). Model 2 (Load Share and Covariates).

(x). Model 3 (Frailty and Covariates).

Model	Parameter Estimates							
	$\widehat{\theta_1}$	$\widehat{\theta_2}$	$\widehat{\theta'_1}$	$\widehat{\theta'_2}$	$\widehat{\gamma}$	$\widehat{\beta}$	$\widehat{\alpha}$	AIC
			Model 1					
Estimates	0.1927	0.3100	0.9366	0.9937	0.3340	0.7286	0.1464	1899.96
S.E	0.0073	0.0115	0.0493	0.0340	0.0045	0.0561	0.0015	
LCL	0.1784	0.2957	0.8399	0.9270	0.3253	0.6187	0.1435	
UCL	0.2070	0.3243	1.0333	1.0604	0.3427	0.8385	0.1493	
			Model 2					
Estimates	0.7548	0.8297	0.9684	1.0081	0.4525	-1.7174		1952.388
S.E	0.0177	0.0096	0.0171	0.0222	0.0023	0.0093		
LCL	0.7201	0.7950	0.9350	0.9646	0.4475	-1.6993		
UCL	0.7895	0.8644	1.0018	1.0516	0.4575	-1.7355		
			Model 3					
Estimates					0.3930	0.7517	0.4344	3053.8
S.E					0.0022	0.0021	0.0012	
LCL					0.3889	0.7475	0.4323	
UCL					0.3971	0.7559	0.4364	

Discussion and Summary

- Simulation Study reveals that profile likelihood method performs well in estimating the parameters.
- On failure of one component, the surviving component may have extra load which also increase the stress level until the failure of the second component.
- For the various choices of the parameters θ_i, θ_i', $i = 1, 2$ and without frailty and covariates our model reduces into the existing models such as Freund (1961), Lu (1989), Asha et.al (2016) and Hanagal (2011).

From the data analysis data set 1 we observed that the frailty plays a significant role in the dependence between failure times, apart from the load sharing dependence. The cross ratio function showed that there is a positive association in the failure times for motor A and motor B.

From the data analysis for data set 2 we observed that the frailty plays a significant role in the dependence between failure times, apart from the load sharing dependence. Also, we observed that the failure of the treated eye increases the failure rate of the untreated eye. Similarly, the failure of the untreated eye increases the failure rate of the treated eye. These findings append the findings of [Huster et al., 1989], Sahu and Dey, 1997 and [Hanagal and Richa, 2011]. The full model that is load share with positive stable frailty model is the best fit model and the AIC also supports this claim. The K-S test revealed that both the marginals fit well under this model.

Future Work

Multivariate extension for load share frailty models and Bayesian parametric approach is another possible future work. Note that extension of this model to higher dimension is not straight forward and every additional dimension needs specific model formulation.

THANK YOU

References. I

Asha, G., Krishna KM, J., and Kundu, D. (2016).
An extension of the Freund's bivariate distribution to model load-sharing systems.
American Journal of Mathematical and Management Sciences, 35(3):1–20.

Clayton, D. G. (1978).
A model for association in bivariate life tables and its application in epidemiological studies of familial tendency in chronic disease incidence.
Biometrika, 65(1):141–151.

Cox, D. R. (1972).
Regression models and life tables.
Journal of the Royal Statistical Society: Series B (Methodological), 34(2):187–220.

References. II

Daniels, H. (1945).
The statistical theory of the strength of bundles of threads. i.
Proceedings of the Royal Society of London. Series A. Mathematical and Physical Sciences, 183(995):405–435.

Deshpande, J., Dewan, I., and Naik-Nimbalkar, U. (2010).
A family of distributions to model load sharing systems.
Journal of Statistical Planning and Inference, 140(6):1441–1451.

Dewan, I. and Naik-Nimbalkar, U. V. (2010).
Load-sharing systems.
Wiley Encyclopedia of Operations Research and Management Science.

References. III

Freund, J. E. (1961).
A bivariate extension of the exponential distribution.
Journal of the American Statistical Association, 56(296):971–977.

Hanagal, D. and Richa, S. (2011).
Analysis of diabetic retinopathy data using shared inverse gaussian frailty model.
Technical Report: University of Pune, Pune, India.

Hanagal, D. D. (1992).
Some inference results in modified freund's bivariate exponential distribution.
Biometrical Journal, 34(6):745–756.

References. IV

Hanagal, D. D. (2005).
A positive stable frailty regression model in bivariate survival data.
Journal of the Indian Society for Probability and Statistics, 9:35–44.

Hanagal, D. D. (2011).
Modeling survival data using frailty models.
Chapman & Hall/CRC.

Hougaard, P. and Hougaard, P. (2000).
Analysis of multivariate survival data, volume 564.
Springer New York.

Huster, W. J., Brookmeyer, R., and Self, S. G. (1989).
Modelling paired survival data with covariates.
Biometrics, 45:145–156.

References. V

Johnson, N. L. and Kotz, S. (1975).
A vector multivariate hazard rate.
Journal of Multivariate Analysis, 5(1):53–66.

Kalbfleisch, J. D. and Prentice, R. L. (2002).
Relative risk (Cox) regression models.
The Statistical Analysis of Failure Time Data, Second Edition, pages 95–147.

Kapur, K. and Lamberson, L. (1977).
Reliability in engineering design, jhon wiley and sons.
Inc., New York.

Kim, H. and Kvam, P. H. (2004).
Reliability estimation based on system data with an unknown load share rule.
Lifetime Data Analysis, 10(1):83–94.

References. VI

Klein, J. P., Moeschberger, M., Li, Y., Wang, S., and Flournoy, N. (1992).
Estimating random effects in the Framingham heart study.
Springer.

Kvam, P. H. and Lu, J.-C. (2007).
Load-sharing models.
Encyclopedia of Statistics in Quality and Reliability.

Kvam, P. H. and Pena, E. A. (2003).
Estimating load-sharing properties in a dynamic reliability system.
www.stat.sc.edu/pena/Tech Reports/KvamPena2003.pdf.

References. VII

Lam, K. and Kuk, A. Y. (1997).
A marginal likelihood approach to estimation in frailty models.
Journal of the American Statistical Association, 92(439):985–990.

Liu, H. (1998).
Reliability of a load-sharing k-out-of-n: G system: non-iid components with arbitrary distributions.
Reliability, IEEE Transactions on, 47(3):279–284.

Lu, J.-C. (1989).
Weibull extensions of the freund and marshall-olkin bivariate exponential models.
Reliability, IEEE Transactions on, 38(5):615–619.

References. VIII

Ma, Z. S. and Krings, A. W. (2008).
Multivariate survival analysis (i): shared frailty approaches to reliability and dependence modeling.
In *Aerospace Conference, 2008 IEEE*, pages 1–21. IEEE.

McKenzie, E. (1982).
Product autoregression: A time series characterization of the gamma distribution.
Journal of Applied Probability, 19:463–468.

Oakes, D. (1989).
Bivariate survival models induced by frailties.
Journal of the American Statistical Association, 84(406):487–493.

References. IX

Park, C. (2013).
Parameter estimation from load-sharing system data using the expectation–maximization algorithm.
IIE Transactions, 45(2):147–163.

ReliaSoft (2003).
Using QALT models to analyze system configurations with load sharing.
Reliability Edge Home, 3(3):1–4.

Sahu, S. K. and Dey, D. K. (2000).
A comparison of frailty and other models for bivariate survival data.
Lifetime data analysis, 6(3):207–228.

References. X

Shaked, M. (1984).
Extensions of the freund distribution with applications in reliability theory.
Operations research, 32(4):917–925.

Singpurwalla, N. D. (2006).
Reliability and Risk: A Bayesian perspective.
John Wiley & Sons.

Spurrier, J. D. and Weier, D. (1981).
Bivariate survival model derived from a weibull distribution.
Reliability, IEEE Transactions on, 30(2):194–197.

Stefanescu, C. and Turnbull, B. W. (2012).
Multivariate frailty models for exchangeable survival data with covariates.
Technometrics.

References. XI

Sutar, S. S. and Naik-Nimbalkar, U. (2014).
Accelerated failure time models for load sharing systems.
IEEE Transactions on Reliability.